Diritti riservati All rights reserved

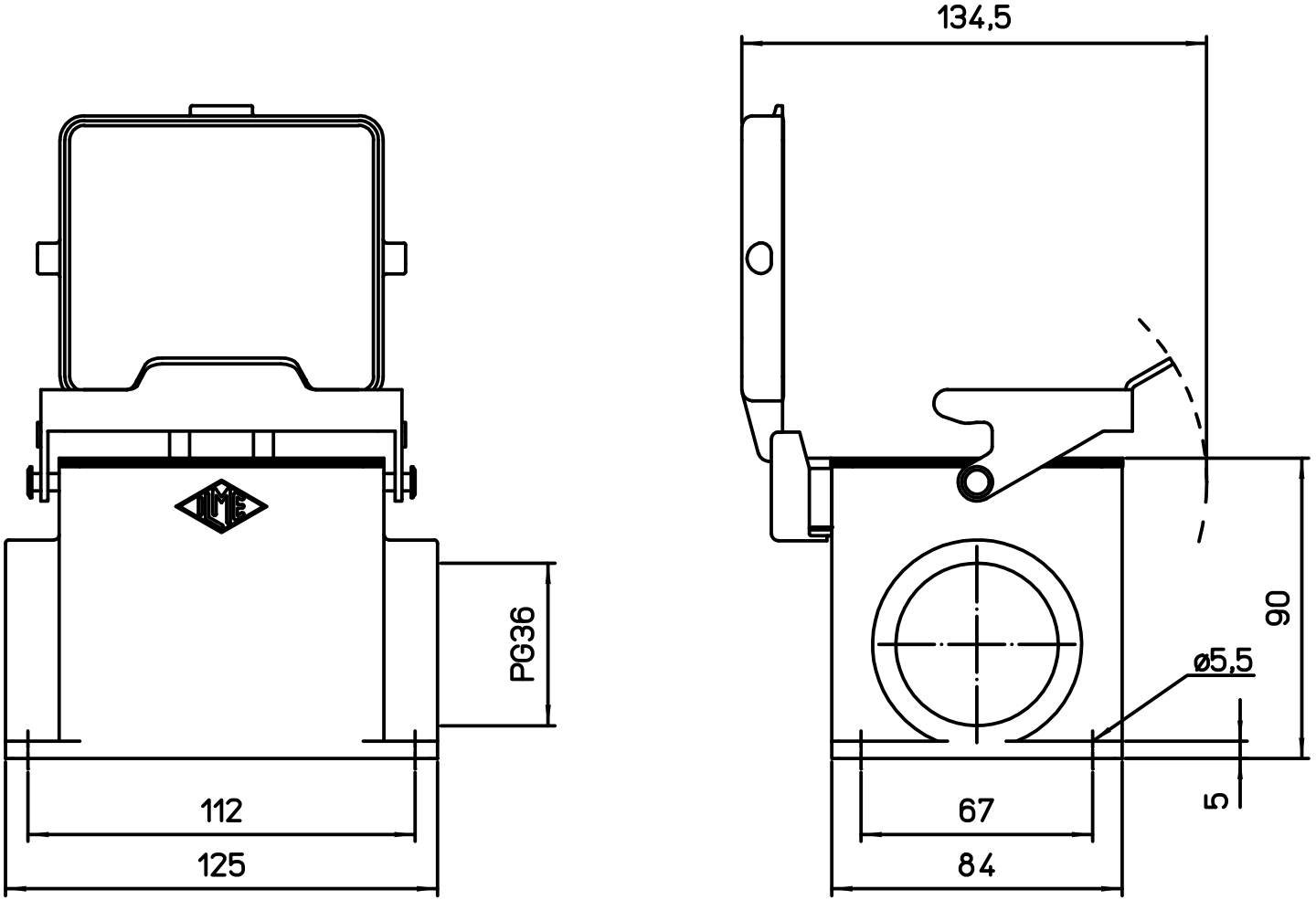

dimensions in mm	
Date	20/03/19
Sign.	Pitasi

CHPX 32 LS

Surface mounting housing with 1L and cover, PG36

Scale 1:2